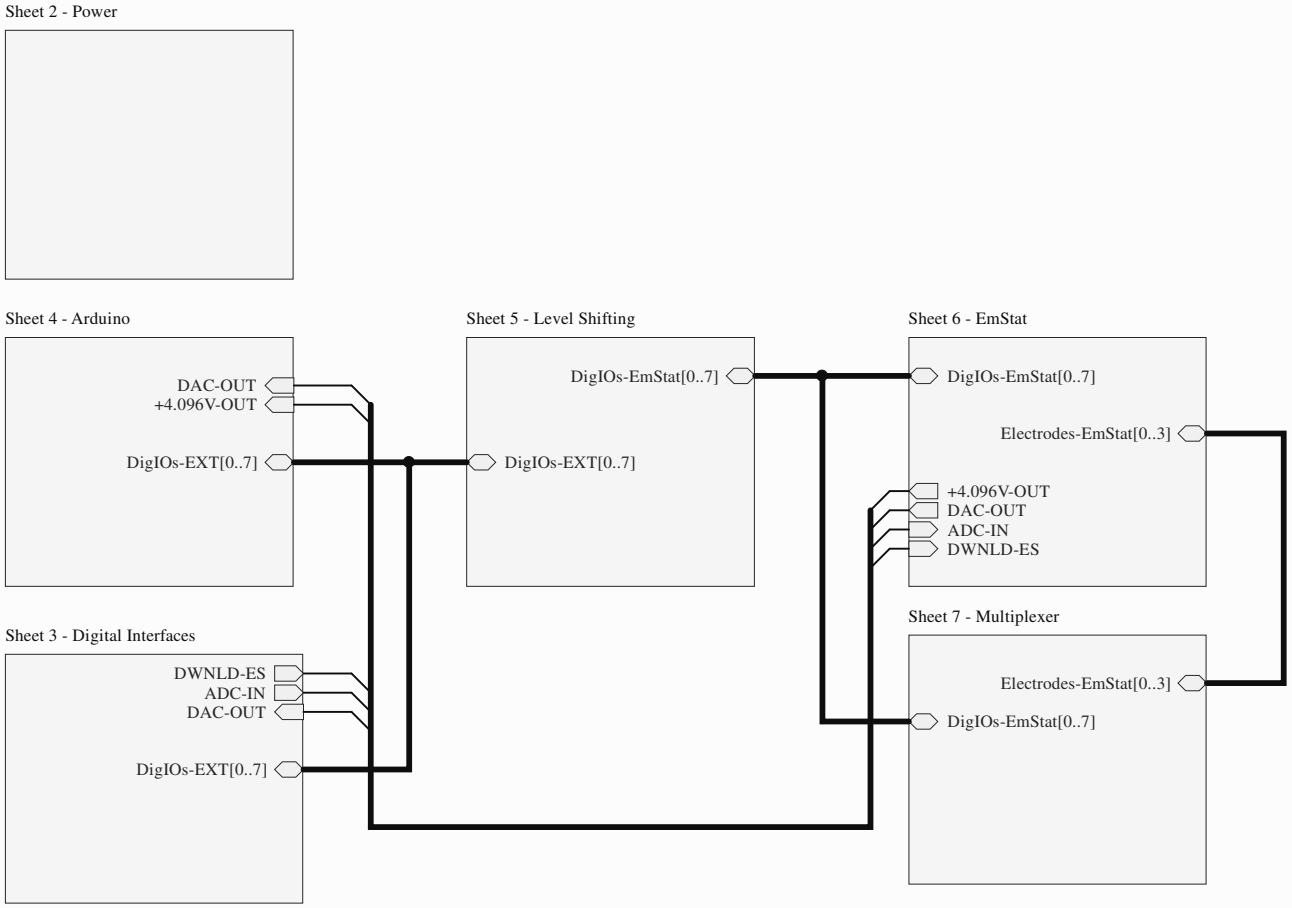


| | | |
|---|---|---|
| Project: EmStat Development Board | Revision: 1.2 | Cannot open file |
| Sheet Name: Topsheet | Sheet No.: 1 of 7 | PalmSens BV<br>Randhoeve 221<br>3995GA Houten<br>The Netherlands |
| Drawn By: S Mitchell | Date: 11-1-2017 | |

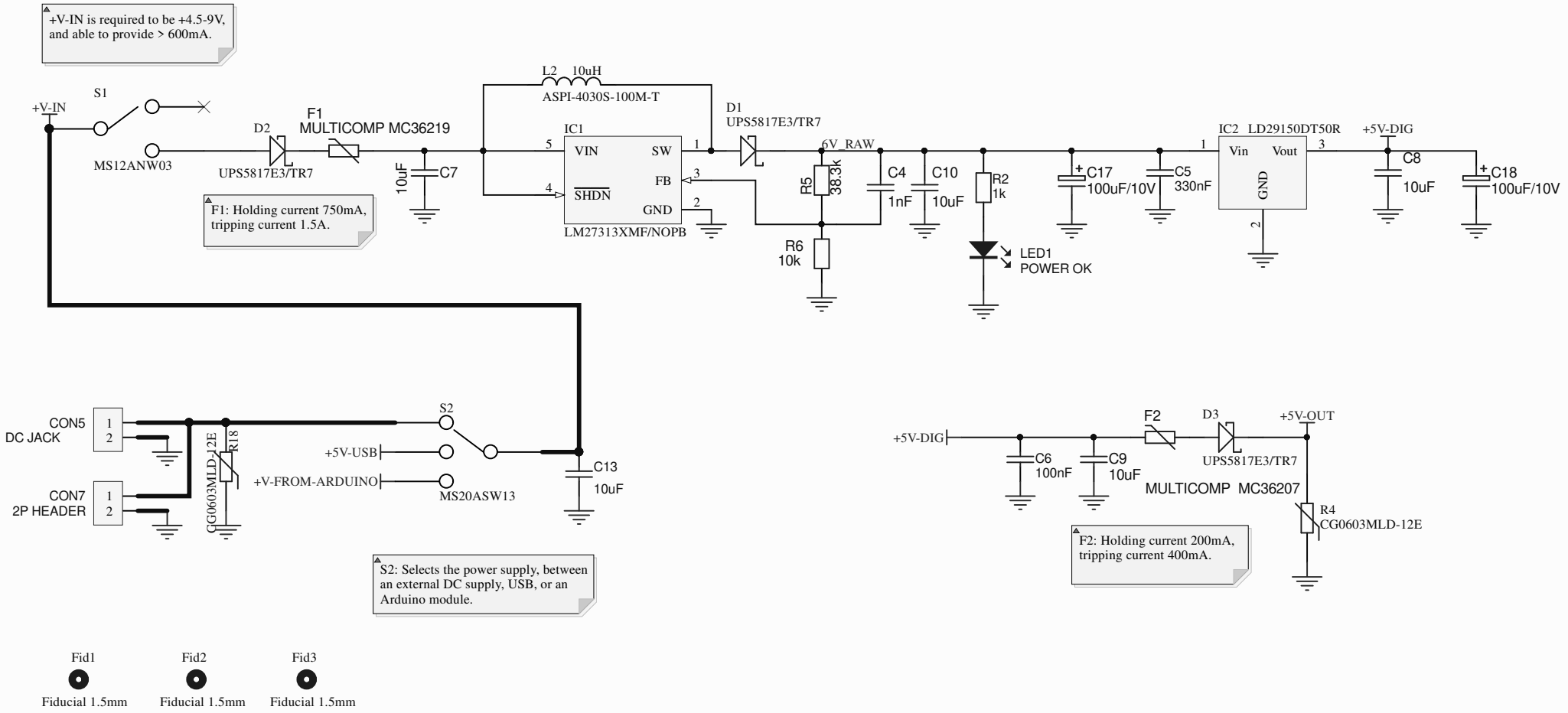


| | | |
|---|---|---|
| Project: EmStat Development Board | Revision: 1.2 | Cannot open file |
| Sheet Name: Power | Sheet No.: 2 of 7 | PalmSens BV<br>Randhoeve 221<br>3995GA Houten<br>The Netherlands |
| Drawn By: S Mitchell | Date: 13-1-2017 | |

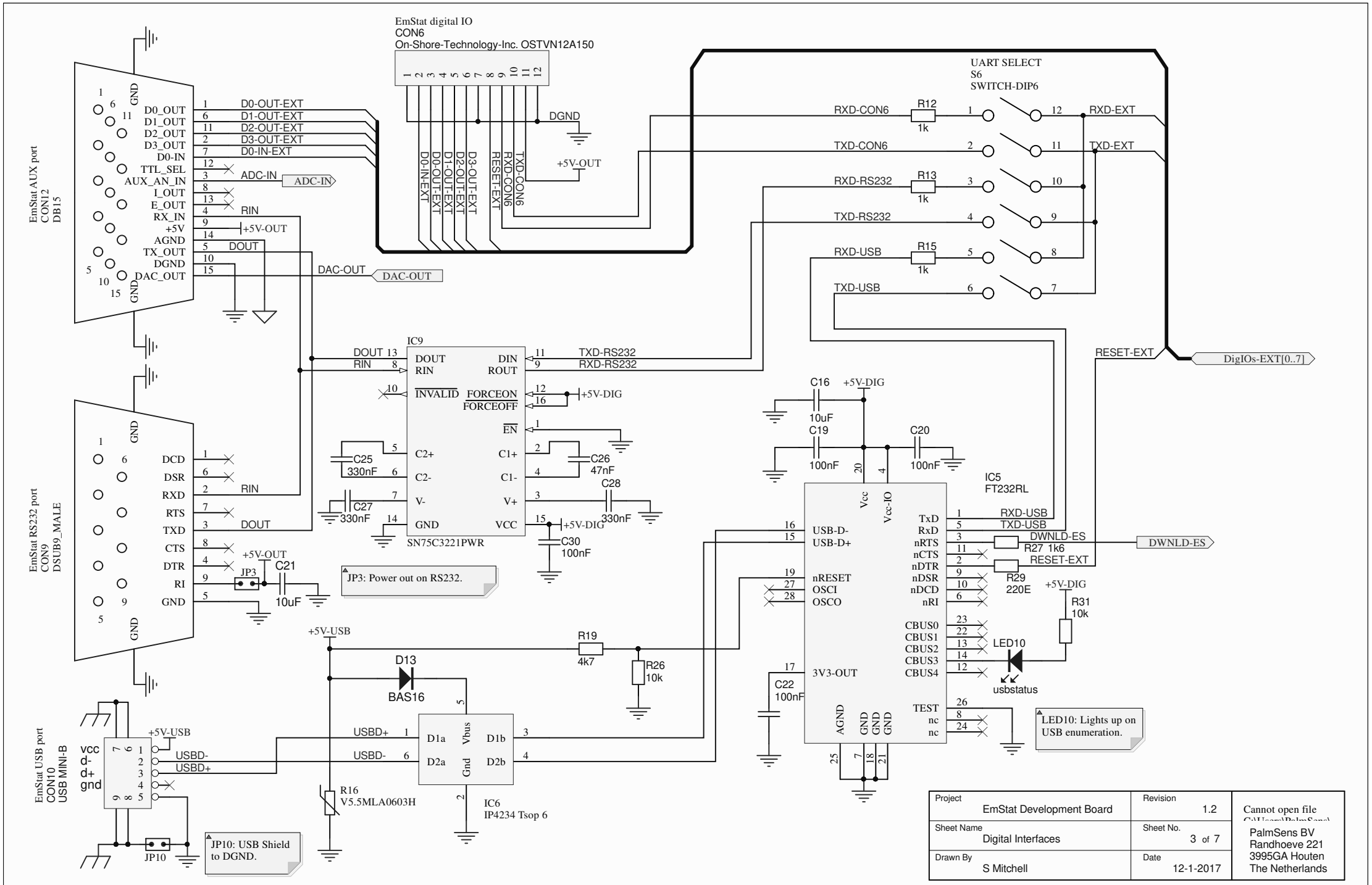
EmStat digital IO
CON6
On-Shore-Technology-Inc. OSTVN12A150
D0-IN-EXT
D0-OUT-EXT
D1-OUT-EXT
D2-OUT-EXT
D3-OUT-EXT
RESET-EXT
RXD-CON6
TXD-CON6
DGND
+5V-OUT
UART SELECT
S6
SWITCH-DIP6
RXD-CON6
TXD-CON6
RXD-RS232
TXD-RS232
RXD-USB
TXD-USB
R12
1k
R13
1k
R15
1k
RXD-EXT
TXD-EXT
RESET-EXT
DigIOs-EXT[0..7]
EmStat AUX port
CON12
DB15
D0_OUT
D1_OUT
D2_OUT
D3_OUT
D0-IN
TTL_SEL
AUX_AN_IN
I_OUT
E_OUT
RX_IN
+5V
AGND
TX_OUT
DGND
DAC_OUT
D0-OUT-EXT
D1-OUT-EXT
D2-OUT-EXT
D3-OUT-EXT
D0-IN-EXT
ADC-IN
RIN
+5V-OUT
DOUT
DAC-OUT
EmStat RS232 port
CON9
DSUB9_MALE
DCD
DSR
RXD
RTS
TXD
CTS
DTR
RI
GND
JP3
C21
10uF
JP3: Power out on RS232.
IC9
DOUT
RIN
INVALID
FORCEON
FORCEOFF
EN
C2+
C2-
V-
GND
DIN
ROUT
C1+
C1-
V+
VCC
TXD-RS232
RXD-RS232
+5V-DIG
C25
330nF
C27
330nF
C26
47nF
C28
330nF
C30
100nF
SN75C3221PWR
C16
10uF
C19
100nF
C20
100nF
IC5
FT232RL
Vcc
Vcc-IO
USB-D-
USB-D+
nRESET
OSCI
OSCO
3V3-OUT
AGND
TxD
RxD
nRTS
nCTS
nDTR
nDSR
nDCD
nRI
CBUS0
CBUS1
CBUS2
CBUS3
CBUS4
TEST
nc
RXD-USB
TXD-USB
DWNLD-ES
R27 1k6
RESET-EXT
R29
220E
R31
10k
LED10
usbstatus
C22
100nF
LED10: Lights up on USB enumeration.
+5V-USB
R19
4k7
R26
10k
D13
BAS16
EmStat USB port
CON10
USB MINI-B
vcc
d-
d+
gnd
USBD+
USBD-
D1a
D2a
Vbus
Gnd
D1b
D2b
R16
V5.5MLA0603H
IC6
IP4234 Tsop 6
JP10
JP10: USB Shield to DGND.
Project
EmStat Development Board
Revision
1.2
Cannot open file
Sheet Name
Digital Interfaces
Sheet No.
3 of 7
Drawn By
S Mitchell
Date
12-1-2017
PalmSens BV
Randhoeve 221
3995GA Houten
The Netherlands

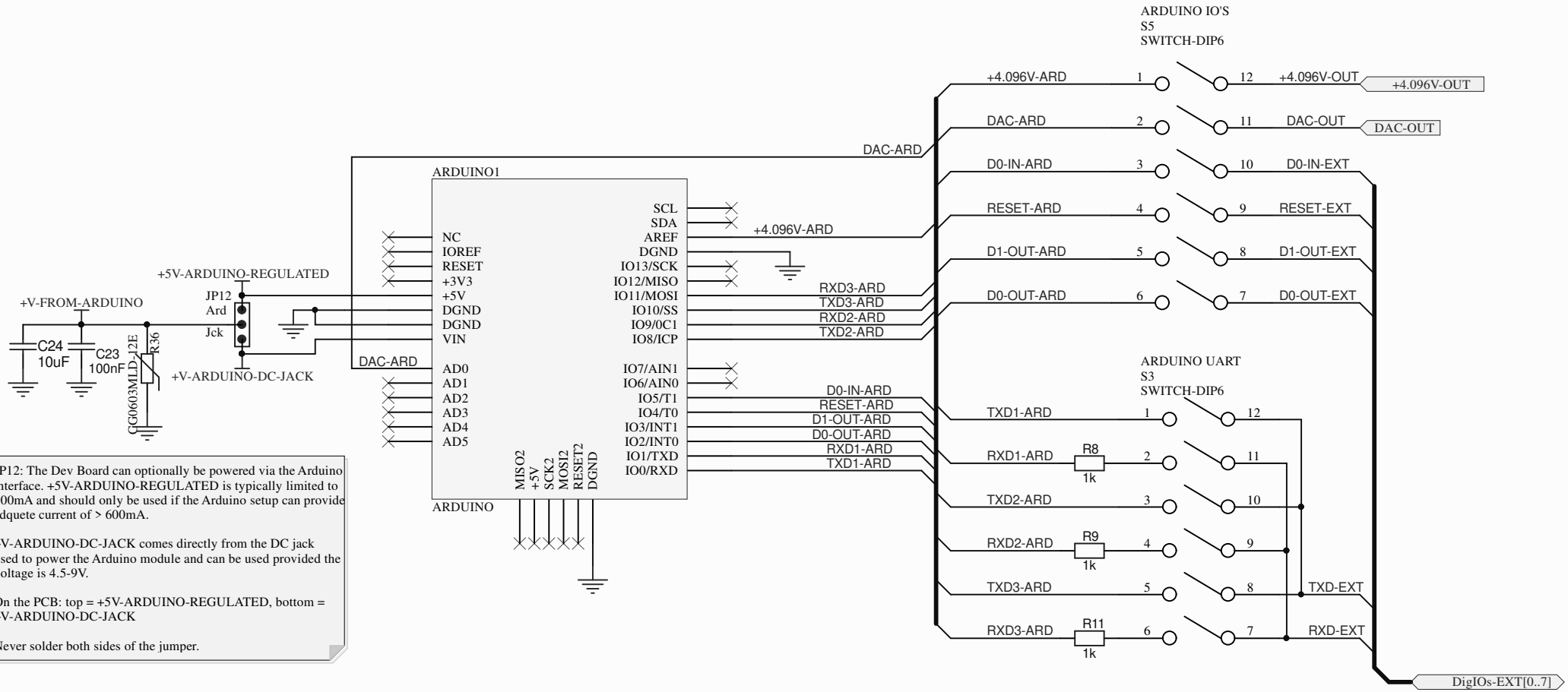


JP12: The Dev Board can optionally be powered via the Arduino interface. +5V-ARDUINO-REGULATED is typically limited to 200mA and should only be used if the Arduino setup can provide adquete current of > 600mA.

+V-ARDUINO-DC-JACK comes directly from the DC jack used to power the Arduino module and can be used provided the voltage is 4.5-9V.

On the PCB: top = +5V-ARDUINO-REGULATED, bottom = +V-ARDUINO-DC-JACK

Never solder both sides of the jumper.

| | | |
|---|---|---|
| Project: EmStat Development Board | Revision: 1.2 | Cannot open file |
| Sheet Name: Arduino | Sheet No.: 4 of 7 | PalmSens BV<br>Randhoeve 221<br>3995GA Houten<br>The Netherlands |
| Drawn By: S Mitchell | Date: 12-1-2017 | |

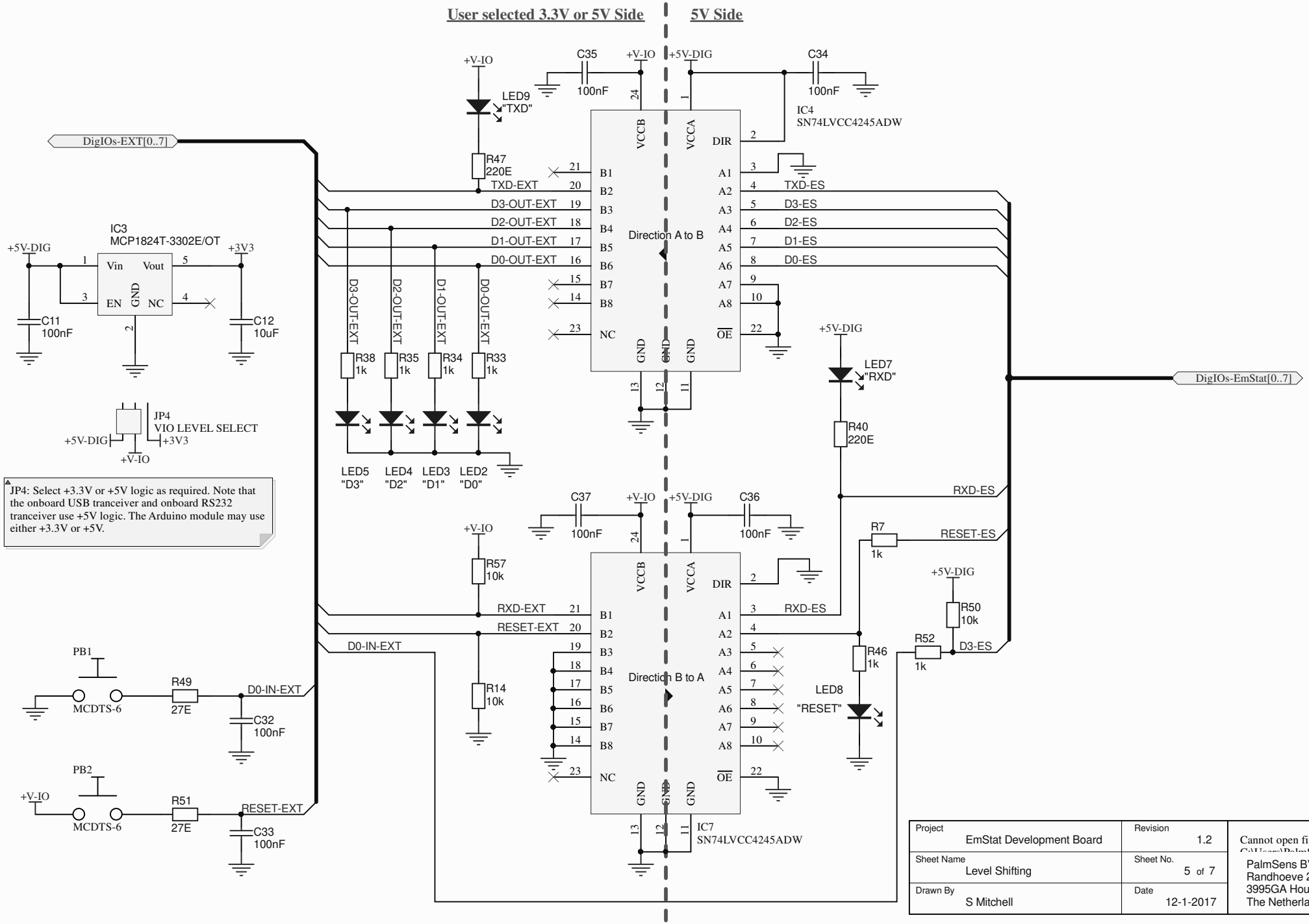
User selected 3.3V or 5V Side
5V Side
DigIOs-EXT[0..7]
DigIOs-EmStat[0..7]
IC4
SN74LVCC4245ADW
Direction A to B
IC7
SN74LVCC4245ADW
Direction B to A
IC3
MCP1824T-3302E/OT
Vin
Vout
EN
GND
NC
+5V-DIG
+3V3
+V-IO
C35
C34
C37
C36
100nF
C11
C12
10uF
C32
C33
LED9
"TXD"
LED7
"RXD"
LED8
"RESET"
LED5
"D3"
LED4
"D2"
LED3
"D1"
LED2
"D0"
R47
220E
R40
220E
R38
1k
R35
1k
R34
1k
R33
1k
R57
10k
R14
10k
R7
1k
R50
10k
R52
1k
R46
1k
R49
27E
R51
27E
TXD-EXT
D3-OUT-EXT
D2-OUT-EXT
D1-OUT-EXT
D0-OUT-EXT
TXD-ES
D3-ES
D2-ES
D1-ES
D0-ES
RXD-ES
RESET-ES
RXD-EXT
RESET-EXT
D0-IN-EXT
D3-ES
JP4
VIO LEVEL SELECT
PB1
PB2
MCDTS-6
JP4: Select +3.3V or +5V logic as required. Note that the onboard USB tranceiver and onboard RS232 tranceiver use +5V logic. The Arduino module may use either +3.3V or +5V.
Project
EmStat Development Board
Revision
1.2
Sheet Name
Level Shifting
Sheet No.
5 of 7
Drawn By
S Mitchell
Date
12-1-2017
Cannot open file
PalmSens BV
Randhoeve 221
3995GA Houten
The Netherlands

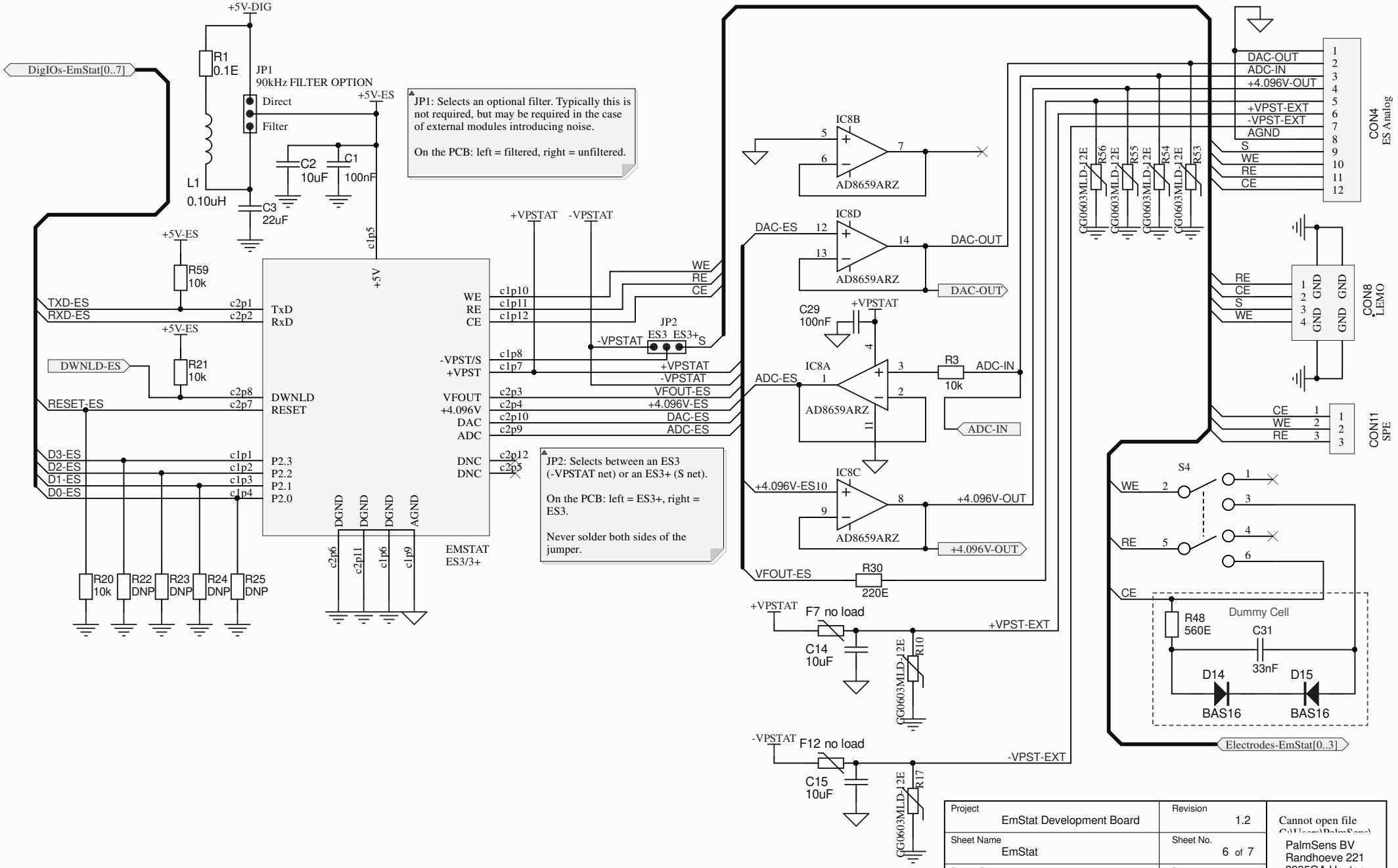


| | | |
|---|---|---|
| Project: EmStat Development Board | Revision: 1.2 | Cannot open file |
| Sheet Name: EmStat | Sheet No.: 6 of 7 | PalmSens BV<br>Randhoeve 221<br>3995GA Houten<br>The Netherlands |
| Drawn By: S Mitchell | Date: 12-1-2017 | |

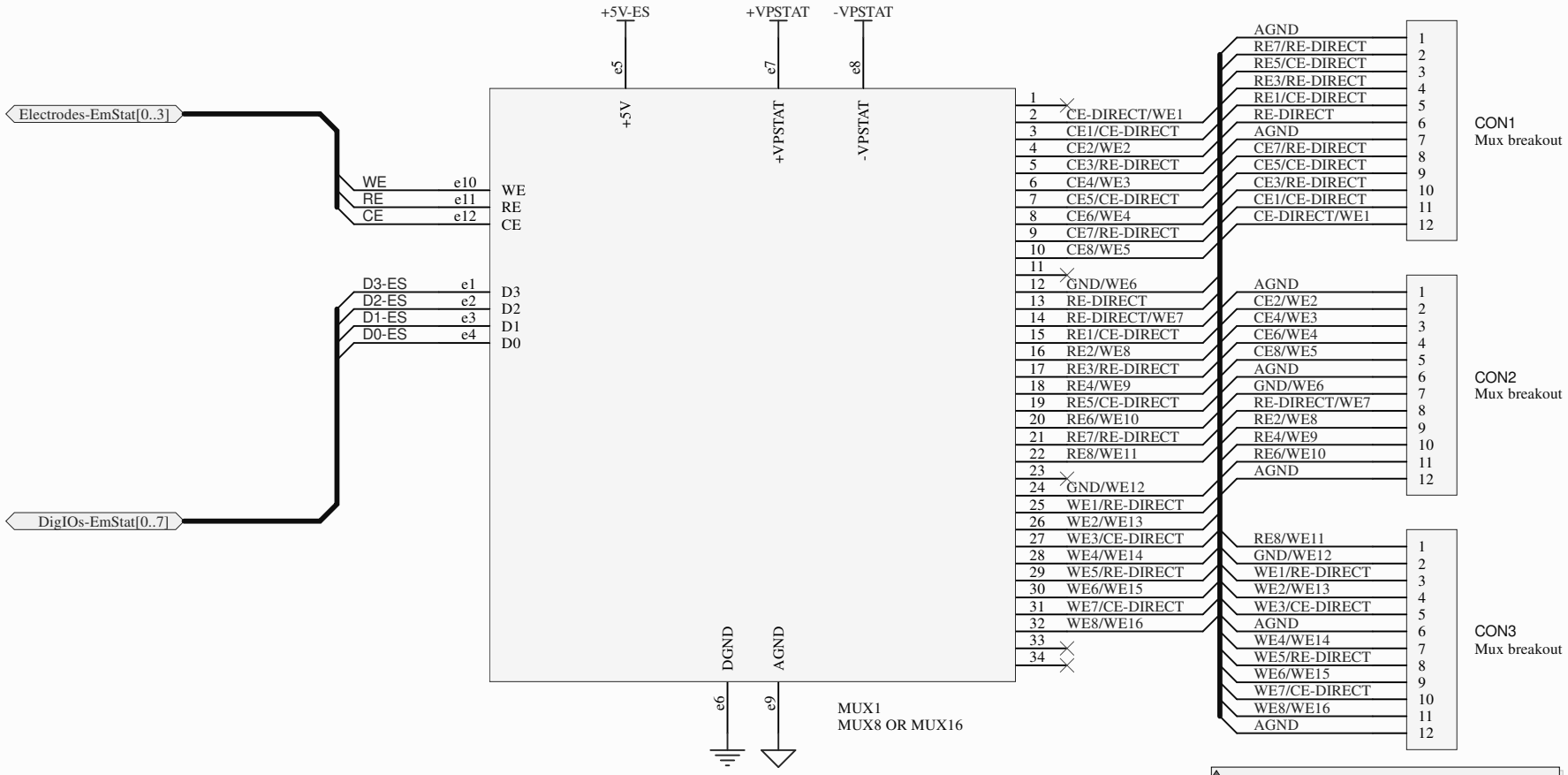


| | | |
|---|---|---|
| Project: EmStat Development Board | Revision: 1.2 | Cannot open file |
| Sheet Name: Multiplexer | Sheet No.: 7 of 7 | PalmSens BV<br>Randhoeve 221<br>3995GA Houten<br>The Netherlands |
| Drawn By: S Mitchell | Date: 12-1-2017 | |

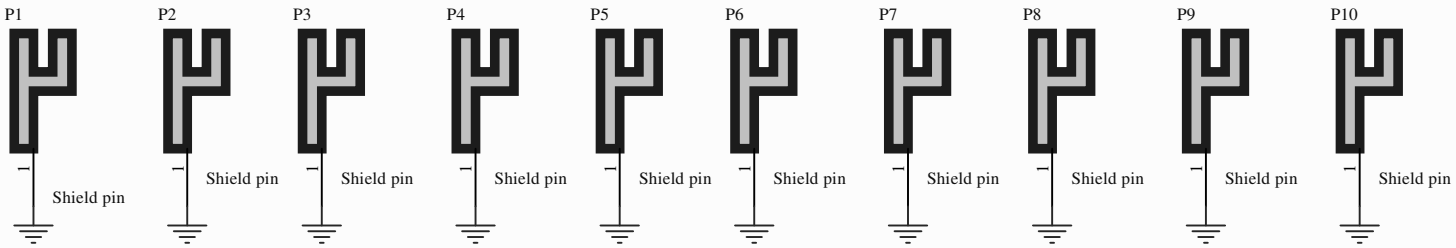


Page wont be included in documentation

| | | |
|---|---|---|
| Project<br>EmStat Development Board | Revision<br>* | Cannot open file |
| Sheet Name<br>SheetTitle | Sheet No.<br>* of * | PalmSens BV<br>Randhoeven 221<br>3995GA Houten<br>The Netherlands |
| Drawn By<br>* | Date<br>12-1-2017 | |

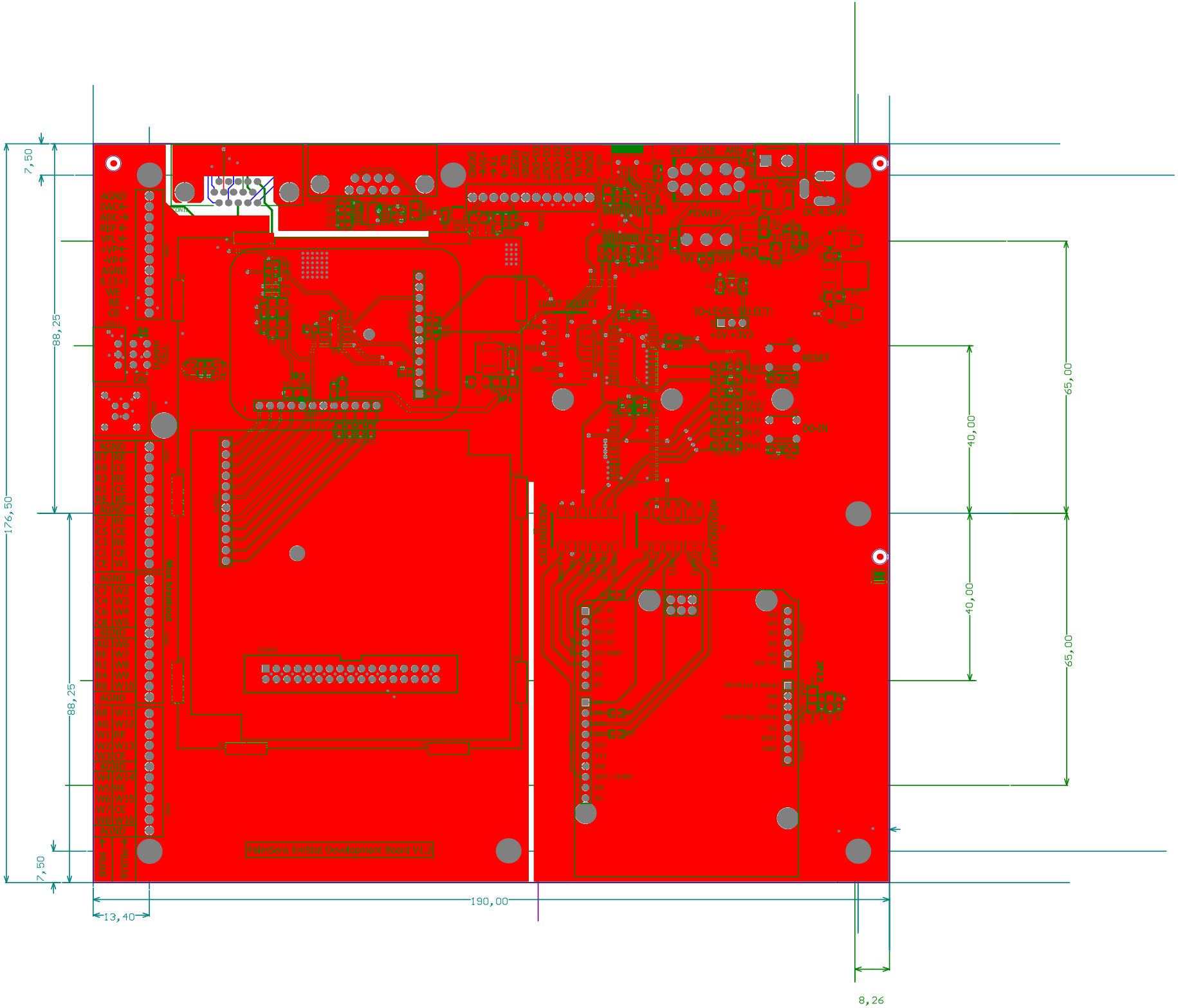
PalmSens EmStat Development Board V1.2
Multiplexer Input
ARDUINO IOS
ARDUINO UART
POWER
DC 4.5-5V
IO-LEVEL SELECT:
+5V +3V3
RESET
D0-IN
UART SELECT
BATTERY CELL
176,50
88,25
88,25
7,50
7,50
65,00
40,00
40,00
65,00
190,00
13,40
8,26