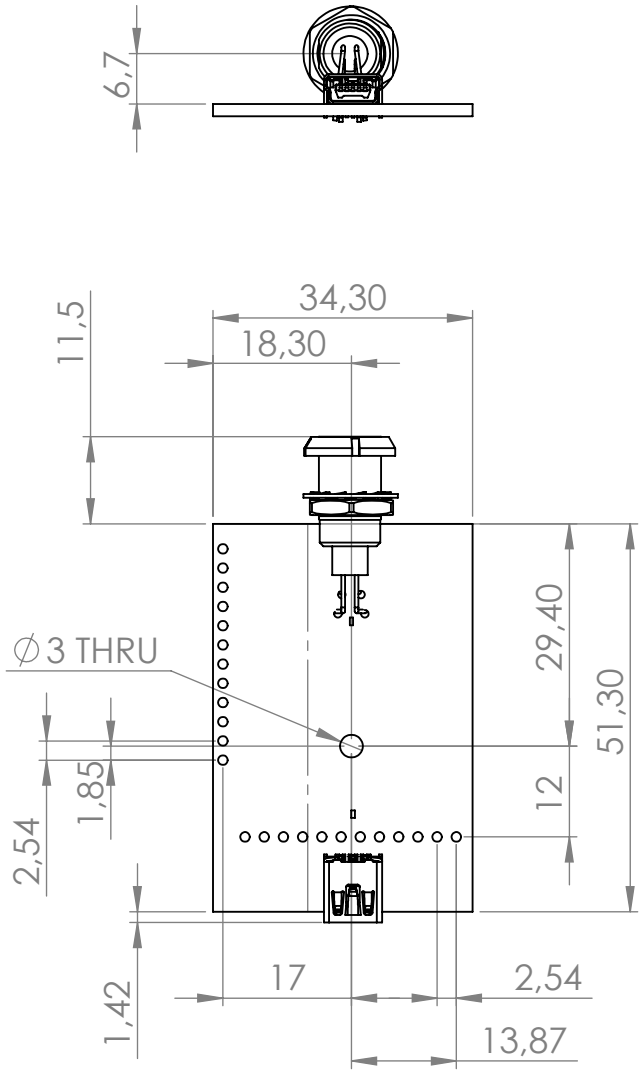


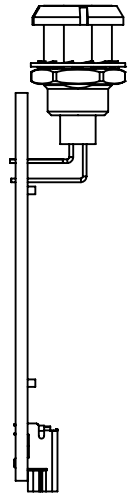

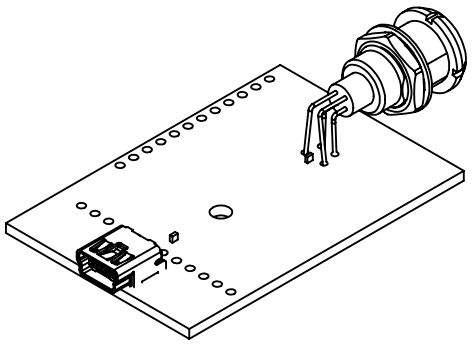

UNLESS OTHERWISE SPECIFIED:
DIMENSIONS ARE IN MILLIMETERS

SURFACE FINISH:
TOLERANCES:
LINEAR:
ANGULAR:

DEBUR AND BREAK SHARP EDGES

DO NOT SCALE DRAWING

REVISION 1-1-2018

PalmSens BV

TITLE:

EmStat3 PCB main dimensions

DWG NO. ES3-PCB

A4

SCALE:1:1

SHEET 1 OF 1